Mibro Watch Phone P6 User Manual

mibro

Product Overview

Package Contents: Mibro Watch Phone P6, user manual, screen protective film, charging cable, SIM card ejector

Note: If an error occurs, press and hold the power button for 15 seconds to force restart the watch.

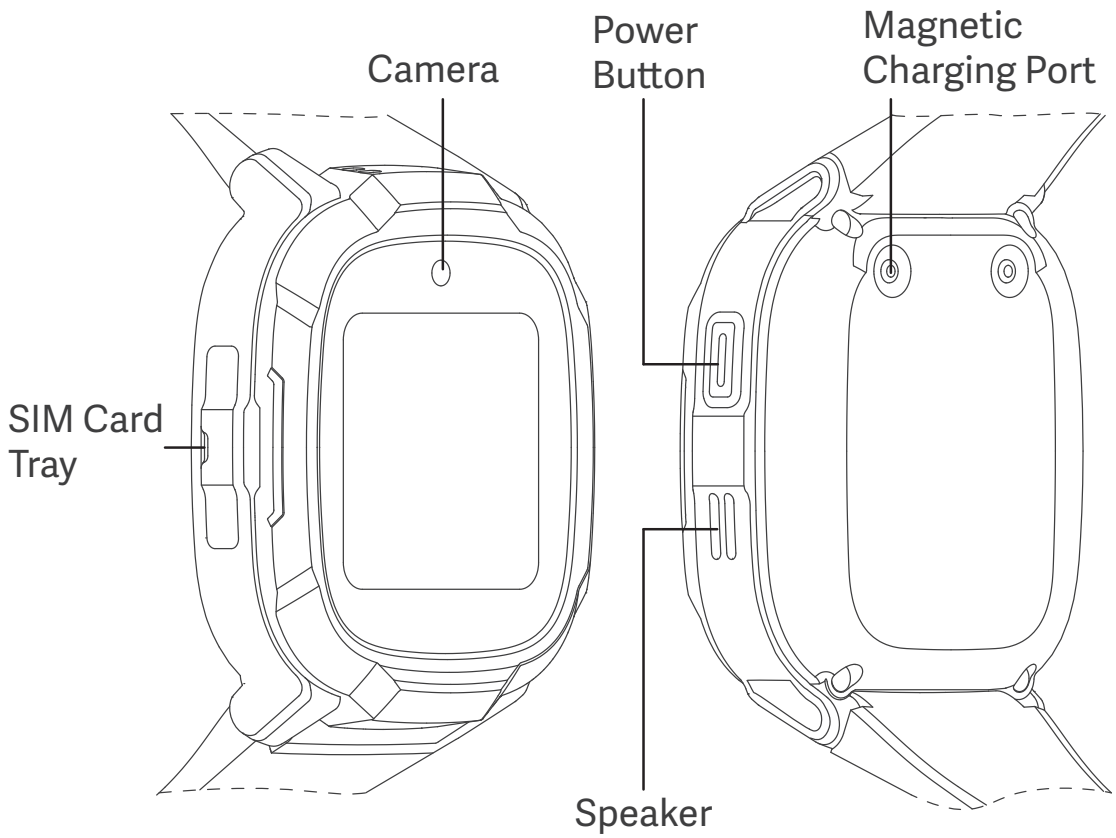

Installing the SIM Card

Supported SIM card type: Nano-SIM card. Follow the steps below to install:

- Pry the card tray out of the watch with the SIM card ejector.

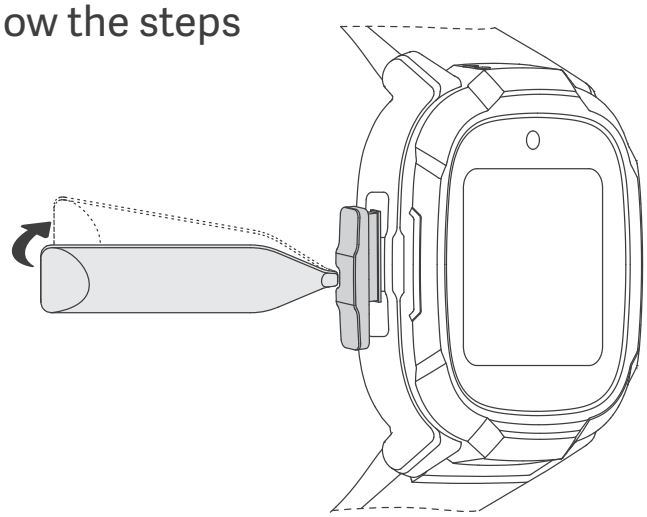

- Correctly place the Nano-SIM card in the card tray, and insert the card tray into the watch. Make sure to install the card tray securely for the waterproof effect.

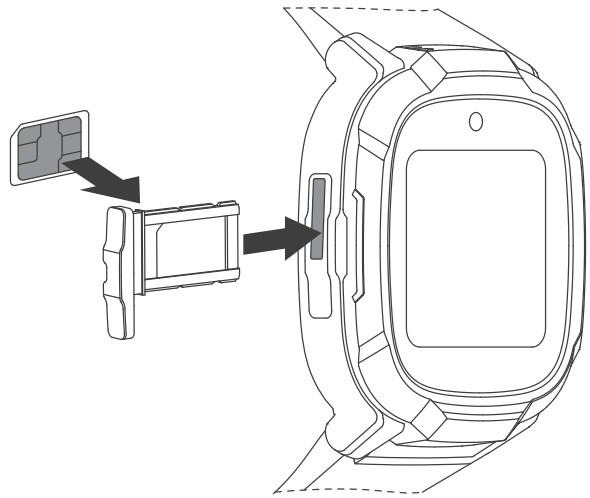

Notes:

- Please select an appropriate operator. The functions of this watch, such as positioning and calls, will depend on the operator's signals.
- Do not insert a trimmed card into the card slot of the watch. Otherwise, the SIM card may not be inserted or removed normally, and the card slot may be damaged. The damage caused by such behaviors is not covered by the warranty.

Installing the App

- Search "Mibro Kids" in Google PlayStore or App Store for both Android and iOS smartphone to download and install the application.
- Or scan the QR code below (or in the menu) to download the app.

Binding the Watch

Open the Mibro Kids app, scan the QR code displayed on the watch's screen (or Menu > QR code), and follow the instructions to complete the binding of the watch. Before binding, make sure that the SIM card is properly installed into the watch, and that the watch is turned on and displays time correctly; otherwise, the watch cannot be bound.

Note: When the mobile data network or the Wi-Fi network signal is poor, the watch may not bind with the app successfully. Try to bind again in an environment with a strong network signal.

Turning on/off

Turning on: Press and hold the power button for 3 seconds. Animation display on the watch screen indicates that the watch is powered on successfully.

Turning off:The operation of watch poweroff is not supported. You can control the watch poweroff through Mibro Kids APP.

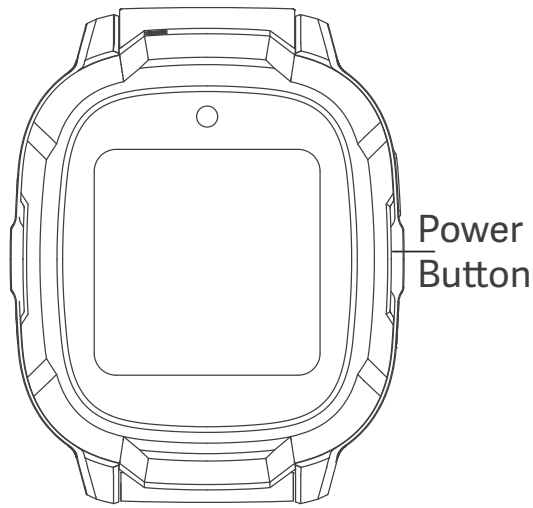

Charging the Watch

Place the metal contacts of the magnetic charging cable close to the charging contacts of the watch, then the metal contacts will magnetically attach to the charging contacts of the watch and the charging will start. The charging indicator will display on the screen of the watch.

Notes:

- Make sure that the watch and the metal contacts of the magnetic charging cable are free from dirt or corrosion.
- Clean the back of the watch and the metal contacts of the magnetic charging cable with a clean cloth regularly. Make sure that the contacts of the watch and the magnetic charging cable are fully contacted to ensure normal charging.
- This watch does not include a power adapter. To ensure the safety of your family and property, please use and purchase LPS power adapters that comply with the local certifications from qualified manufacturers. Do not use low-quality or counterfeit power adapters to avoid bursts or fires.

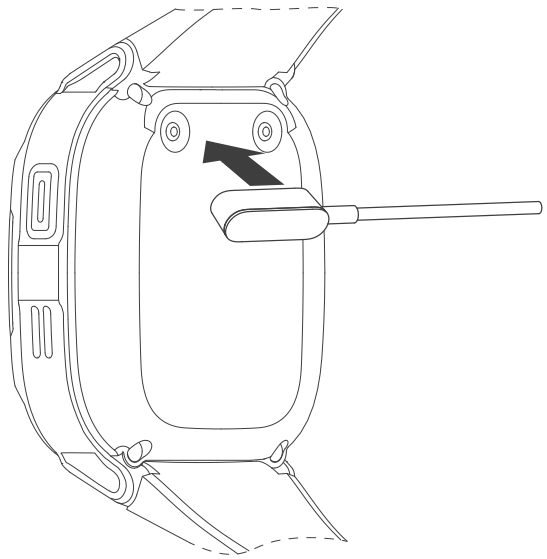

Making/Answering Calls

In the function list, swipe to and enter the call-making function, then select and tap a contact to make a voice or video call.
Answering a voice/video call: Tap the corresponding button on the screen to answer or end an incoming voice/video call.

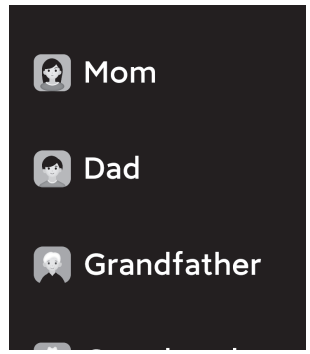

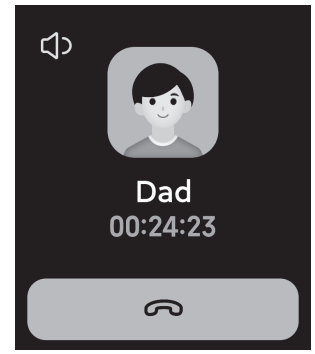

Voice Chat

In the function list, swipe to and enter the contacts, then tap a contact to send or receive voice messages. The voice messages can support up to 15 seconds.

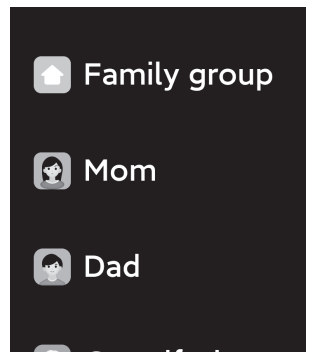

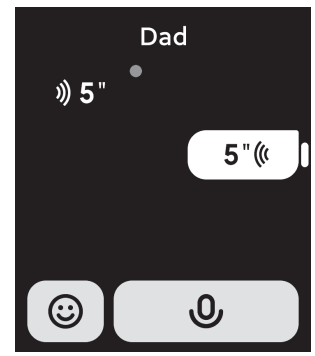

Disclaimers

- Before using the watch, please read and comply with the following instructions and warnings. Mibro is not liable for the consequences caused by improper use or non-compliance with the relevant instructions of the watch.
- This watch is equipped with the GPS positioning function. This function is disabled when the watch is not bound and can be used once the watch is bound.
- In extreme weather conditions, the GPS positioning may not be able to work properly outdoors due to failure in searching the satellite signals.
- Always use the accessories provided with the watch. Using the watch improperly or connecting it with incompatible accessories will void the warranty, cause irreparable damage to the watch, and even endanger the safety of you and your children. Mibro is not liable for the cases mentioned above.
- Only use original accessories. Please purchase accessories from qualified manufacturers.
- The color of the watch and its strap may fade over time, which will not affect the use of the watch and is harmless to the human body.
- Disassembling the watch on your own will void the warranty.
- This watch can work normally only when the network is available. Mibro is not liable for any loss due to service interruption caused by network failure or any other force majeure.
- For the purpose of constant improvement and sustainable development, Mibro reserves the right to modify and improve any product details described in this manual without prior notice. The contents of this user manual are

based on the condition of the product when it was manufactured. Unless otherwise authorized by the applicable laws, no explicit or tacit guarantee of any kind is made on the accuracy, reliability, and contents of this manual.

- To the maximum extent permitted by applicable laws, in no event shall Mibro or any of its suppliers be liable for any special, incidental, consequential, or indirect damages howsoever caused.
- Part of the functions of this watch are provided by third parties, including but not limited to map and weather.
- This user manual contains important information, please retain it for future reference.

Precautions on Place of Use and Operating Environment

- Any radio transmitting device, including this watch, may interfere with the functions of improperly protected medical devices. Abide by the regulations in places where the wireless transmission function of electronic devices is prohibited.
- For pacemakers and implantable cardioverter-defibrillators, make sure the distance between the watch and these two medical devices is greater than the required safe distance when using the watch. Do not put the watch in the coat pocket to minimize potential interference. Turn off the watch immediately if there is any reason to suspect that interference is taking place.
- Some digital wireless devices may cause interference to some hearing aids or cochlear implants. In case of such interference, stop using these digital wireless devices, and contact the manufacturer for solutions.

- If you and the people around you also use other medical devices, consult the manufacturers of these devices to check if the RF signals around can be fully shielded. You can also consult the doctor for relevant information.
- Do not use this watch in gas stations, fuel depots, chemical plants, or transportation or storage facilities of fuels or chemicals. Otherwise, it may cause explosions or fires.
- Turn off this watch before takeoff. Do not use this watch during a flight.
- Comply with any relevant regulations. Do not use this watch in places where blasting operations are carried out.
- All wireless devices may be interfered with, and their performance may be affected.
- Do not put the watch, batteries, or chargers (charging cables) in or around any heating devices or high-voltage devices, such as microwave ovens, ovens, radiators, and electric heaters. Otherwise, it may cause damage to the circuit or result in fires, explosions, or other accidents.
- Do not let children or pets swallow or bite this watch or its accessories to avoid injury.
- Do not use this watch in dusty, humid, or dirty environments or in places close to magnetic fields.
- Do not use this watch during thunderstorms.
- Do not subject this watch and its accessories to strong impact or vibration to avoid damage to them.
- Do not put the speaker of the watch close to the ear, to avoid hearing loss due to excessive volume.
- It is normal that the watch feels warm when using applications with high

power consumption or using some applications on the watch for a long period. This will not affect the performance or service life of the watch.

- If the watch is getting hot, take it off until it cools down. Long periods of skin contact with the high-temperature watch may cause burns, leaving red spots and pigmentation on the skin.
- To replace the watch parts, such as the touch screen, the strap, the strap fixing ring, and the buckle, send them to professional technicians for replacement. Keep small parts out of reach of children to prevent choking or other hazardous situations caused by accidental swallowing of small parts.
- This watch contains small parts and is not suitable for children aged 3 and under.
- Use the watch parts correctly according to the user manual. Do not use them for other purposes.

Precautions on Care & Maintenance

- Do not disassemble the watch and its accessories on your own. When an error occurs with the watch or its accessories, contact the after-sales service team for help.
- Do not use any chemical solvents or cleaning solutions to clean the watch.
- Avoid dropping, hitting, bumping, or shaking the watch. Treating the watch roughly may crack its screen, and cause damage to its internal circuit board and other delicate components.
- If an error occurs during use, press and hold the power button until the watch restarts to turn on, or you can go to the watch's settings to restart the watch.

General errors can be solved in this way.

- Keep the watch fully charged to prolong the battery life. A charged battery will discharge itself gradually if it is left unused for a long period. Not using the watch for a long period may lead to the over-discharge of its battery, which is normal. The watch can be used normally after charging. When the watch is not in use, fully charge and store it in a cool, dry, and dark place.
- The strap may get dirty, and its cleanliness is related to the user's usage environments and habits. The watch should be kept clean during wearing, as it has direct contact with the skin. If there is sweat, dust, or other stains on the strap, wipe it clean with a clean, soft, and dry cloth.
- When the charging contacts on the back of the watch are dirty, clean them with a soft dry cloth. Do not scrape the charging contacts with a hard metal object.
- When the strap is worn out and cracked seriously, it must be replaced with a new one. Go to your dealer or official after-sales service team for replacement. Please note that even if the watch is under warranty, you have to bear the cost of replacement.
- Turn off the watch before cleaning. Do not clean the watch while charging.
- Do not insert sharp objects into the microphone or the speaker to avoid malfunctions.
- Do not use heating methods such as hair dryers to keep or make the watch dry.
- Do not use mechanical tools such as a pressurized air blow gun or cleaning machine to clean the watch..

Precautions on Charging and Battery Use

- Only use the battery approved by the manufacturer. Replacing the battery with the wrong type may result in a failure of safety protection, causing an explosion or fire.
- Do not place the battery in an environment with an extremely high temperature, such as in direct sunlight, fire, microwave oven, or oven. Otherwise, it may cause the battery to explode, leak flammable liquids or gases, or even result in overheating, burst or fire.
- Do not disassemble, strike, squeeze, cut, heat, or burn the battery. Do not touch or pry open the battery with sharp objects or screwdrivers. Otherwise, the battery may burn or even explode.
- Do not subject the battery to extremely low air pressure; otherwise, it may cause the battery to explode or leak flammable liquids or gases.
- When using, charging, or storing the battery, if an error occurs, such as overly high temperature, discoloration, deformation, serious swelling, and fluid leakage, stop using the battery and go to a professional for battery replacement to avoid safety issues.
- Before charging, make sure that the metal charging contacts of the watch and the charging cable are dry and free of dirt.
- As the battery may heat up when charging, do not put it together with combustibles, such as mattresses, clothes, and books, to avoid fires.
- Do not use or store this watch in environments with high temperature, high pressure, humidity, strong static electricity, or strong magnetic field.
- Do not charge the watch in a high-temperature or humid environment. Always

charge it between 5°C and 35°C to avoid a decrease in battery performance and standby performance or accidents.

- To reduce the risk of electric shocks for children, the watch should be charged under the guidance of a parent or guardian.
- Do not swallow the battery to avoid chemical burns.
- If you believe that the battery may have been swallowed or placed anywhere inside the body, seek medical help immediately.
- Stop using the watch if its battery compartment is not closed safely. Keep it away from children.
- Keep new and used batteries away from children.
- Do not dispose of the batteries as household waste. Dispose of them safely as per local laws and regulations.
- This watch contains button batteries. If the button battery is swallowed, it can cause severe internal burns in just 2 hours and even lead to death.
- This watch contains small parts and is not suitable for children aged 3 and under.
- Use the watch parts correctly according to the user manual. Do not use them for other purposes.

Precautions on SIM Card and Charging Cable

- Make sure that the SIM card is correctly inserted and the charging cable is properly connected when charging the watch. Do not forcibly insert the SIM card or connect the charging cable.
- Do not remove the SIM card when the watch is transmitting or accessing information. Otherwise, it may cause data loss and damage to the SIM card.
- The watch will intermittently and actively access the data network to synchronize the server during operation (it will not actively apply for data connection in the test status). Please enable the caller ID function of the SIM card. As the watch will consume a certain amount of data during use and update, make sure that the SIM card has sufficient call charges and data before use. Please refer to the charging criteria of local operators for the call and data charges incurred during the use of the SIM card.

Precautions for People with Skin Allergy

- When using wearable devices, individuals who are allergy-prone are likely to feel uncomfortable. Please take extra care when wearing the watch.
- You may feel uncomfortable by wearing the watch too tightly or for too long. It is recommended to properly adjust the strap or wear the watch on the other hand and observe.
- If the skin around or under the watch suffers from discomforts such as redness, swelling, and itchiness, stop wearing the watch immediately and seek medical assistance.
- The discomforts may be induced again or intensified if you continue to wear

the watch after they disappear.
- Please purchase the genuine strap from the official channel. The strap purchased from non-official channels may cause skin allergies.
- Mibro is not liable for any discomfort caused by individual body conditions.

Precautions on Video Call and Camera Use

- Use the video call function in an environment with a strong and stable network signal.
- When using functions such as video calls, the watch's processor will work at a high speed and generate a large amount of heat. When the watch's temperature reaches the limit, it will automatically trigger protection, and exit the function in use.
- When using the watch, adjust the image quality of the output videos or photos appropriately according to the actual function.
- When the battery level of the watch is too low, the video call function cannot be used. Please charge the watch before use.

Precautions on Wearing

- Do not wear the strap too tightly for a long period in hot and humid environments or when the skin is allergy-prone; otherwise, it may cause rash or itching.
- If the volume of the speaker or the microphone decreases after the watch is in contact with water, remove the water from the speaker or the microphone, then the volume will return to normal.

Waterproof Performance Disclamer

- This watch is water resistant up to 20 meters under ISO standard 22810:2010. It can be worn in the rain, when washing hands, or in other daily watery environments. However, it cannot be used for shallow-water activities, such as swimming in a pool or near the shore. It is also not suitable for diving, water skiing, or other activities involving swift currents or submerging to a certain depth.
- The water-resistant function is not permanent and may decline over time. To ensure the normal use of the watch, please abide by the following instructions:
  - Do not wear the watch when taking a shower, sauna, steam sauna, or bathing in a hot spring.
  - Protect the watch from experiencing sudden temperature changes, such as blowing the watch with the hot air of a hair dryer.
  - Avoid operating, installing, or removing the SIM card when the watch is wet.
  - Avoid contact with swift currents, such as in rafting, surfing, and water skiing.
  - Avoid leaving the watch in the pocket while putting clothes in the washing machine for cleaning.
  - Avoid dropping or striking the watch, as its waterproof performance may be damaged.
  - Avoid contact with solvents like liquor or medical alcohol, acidic substances, detergents, soap water, perfume, spray insecticides, lotion,

sunscreen oil, oil, hair dye, bubble water, etc.

- Wipe sweat away from the watch in time.
- Avoid immersing the watch in water for a long period. When the watch is in contact with water, dry it thoroughly with a clean, soft cloth.
- If the watch is in contact with water (such as after washing hands), the water in the holes of both the speaker and the microphone needs to be removed or dried before use to avoid affecting the sound effect.

Personal Information Security

Please use this watch with the consent of the wearer. To ensure the safety of children, make sure that your watches are not bound by unauthorized persons. Mibro promises to take strict measures to protect the information security of you and your children in accordance with the law.

WEEE Information

All products bearing this symbol are waste electrical and electronic equipment (WEEE as in directive 2012/19/EU) which should not be mixed with unsorted household waste.

Instead, you should protect human health and the environment by handing over your waste equipment to a designated collection point for the recycling of waste electrical and electronic equipment, appointed by the government or local authorities. Correct disposal and recycling will help prevent potential negative consequences to the environment and human health. Please contact the installer or local authorities for more information about the location as well as terms and conditions of such collection points.

EU Declaration of Conformity

CE Hereby, Zhenshi Information Technology (Shanghai) Co., Ltd. declares that the radio equipment type XPSWP004 is in compliance with Directive 2014/53/EU. The full tex
t of the EU declaration of conformity is available at the following internet address: https://www.mibrofit.com/pages/support

RF exposure requirements

As recommended by international guidelines, the device is designed not to exceed the limits established by the European Commission for exposure to radio waves.For the countries that adopt the SAR limit of 2.0 W/kg over 10 grams of tissue. The device complies with RF specifications when the device is worn on the wrist and at a distance of 1.0 cm from your face.

Highest reported SAR value: Head SAR: 0.555 W / kg; Limbs SAR: 2.622 W/kg.

Frequency bands and power

Frequency bands in which the radio equipment operates: Some bands may not be available in all countries or all areas. Please contact the local carrier for more details.

GSM 900：35.5dBm

GSM 1800：32.5dBm

WCDMA Band B1,B8：25.7dBm

LTE Band B1, B3, B7, B8, B20, B28, B38, B40, B41 (2496 MHz–2690 MHz): 25 dBm

Wireless Connectivity：Wi-Fi 2.4GHz band：20dBm

GPS L1：1559MHz-1610MHz GLONASS G1: 1559MHz-1610MHz

Specifications

Name: Mibro Watch Phone P6

Model: XPSWP004

Item Dimensions: 248.6 × 44.9 × 15.6 mm

Operating Temperature: 0°C to 35°C

Battery Type: Lithium-ion polymer battery

Battery Capacity: 900 mAh

Input Voltage: DC 5.0 V

Input Current: 600 mA Max.

The Bluetooth® word mark and logos are registered trademarks owned by Bluetooth SIG, Inc. and any use of such marks by Zhenshi Information Technology (Shanghai) Co., Ltd. is under license. Other trademarks and trade names are those of their respective owners.

Manufacturer: Zhenshi Information Technology (Shanghai) Co., Ltd.
Address: Room 4015, Building 2, No.588 Zixing Road, Minhang District, Shanghai

Made in China