38113

RECOMMEND



DC 12V 24V AC 110V 220V Digital Cycle Timer

3.11 / piece /lot 1



DC 0-100V 10A 50A 100A Electronic Digital

1.2 / piece /lot 1



STC-1000 STC-3000 3008 3018 220V 10A

4.65 / piece /lot 1



Digital Thermostat MH1210W AC 110-220V

3.94 / piece /lot 1



LCR-TC1 160*128 TFT LCD Color Display

19.27 / piece /lot 1



AC110V 220V W3001 XH-W3001 Digital

2.04 / piece /lot 1



Horizontal Float Sensor Switch Side Mount Liquid

0.84 / piece /lot 1



XH-M601 12V Battery Charging Control Board

1.53 / piece /lot 1



12V Car Blade Fuse Holder Add-a-circuit TAP

0.48 / piece /lot 1



10A 30A 6-60V Lead-acid Solar Storage Battery

3.46 / piece /lot 1



12V Car Lead Acid Battery Charge Level

1.38 / piece /lot 1



DESCRIPITION

2 Way LED Digital Temperature Controller Thermostat 12V 24V 220V Dual Probe Temperature sensor meter Relay Output for Fan Fridge Water Heater

Features:

1.Automatic conversion of refrigeration and heating mode

2.Control mode of return difference;Temperature display resolution 0.1

3.The temperature controller has the characteristic of high accuracy, high sensitivity, high stability.

4.Support temperature correction and support for power loss (the parameters of the sudden power failure are still valid

5.Application range is like home temperature control, farm, various cold storage, greenhouse, aquarium, etc

Specifications:

Model: STC-3008 Dual Digital Temperature Controller

Temperature sensor: NTC 10K

Senor length:1M

Temperature measuring range: -55 ° C ~ 120 ° C

Resolution: 0.1 ° C

Accuracy:±1° C

Power supply: DC 12V/24V AC 110-220V

Power consumption: <3W

Storage temperature: -30 ° C ~ 75 ° C

Relative humidity: 20% ~ 85% (No condensate)

Relay contact capacity: Two Relay Cool 10A/240VAC; Heat 10A/240VAC

Package Included:

1 x Dual Digital Temperature Controller

2 x Waterproof Temperature Sensor

Set start up temperature:

Press the "up" button once to display the starting temperature. Long press the "up" button for about 3 seconds,The required temperature can be set by the up and down keys

Set the stop temperature:

Press the button once to display the stop temperature. Long press the button for about 3 seconds and the stop temperature number flashes. The required temperature can be set by the up and down keys

Press "Up 1" Button & "Up 2"Button at the same time to setting mode

Code	Function	Set Range	Default
P0	Compressor 1 delay time	0-60min	0min
P1	Compressor 2 delay time	0-60min	0min
P2	High temperature alarm value	55-120 ° C	120 ° C
P3	Low temperature alarm value	55-120 ° C	-55 ° C

How to restore factory Settings

Press the "Down 1" and "Down 2" button at the same time, the factory setting is restored

PICTURES


STC-3008 MICROCOMPUTER TEMPERATURE CONTROLLER
COOL
HEAT
ALARM
SENSOR H TYPE
TEMP CALIBRATION
+5℃
0℃
-5℃
OUT
20.7
OUT
20.3
STC-3008


STC-3008
WIDELY USED
DIY MORE
www.diymore.cc
STC-3008
DC12V
DC24V
★Strictly distinguish interface of relay,sensor and power.
★Strictly distinguish connection of sensor and power.
Note ★Sensor down-lead and power wire should be kept a proper distance.
1 2 1 2
1 2 3 4 5 6 7 8 9 10
Power Supply
Sensor
Sensor
10A/220VAC
10A/220VAC


STC-3008
DC12V
DC24V
AC110V/AC220V
°C
Temperature
+
Setting
Temperature setting





SPECIFICATION AND SIZE

Front panel size: 75(L)x34.5(w)(mm)
Mounting size: 71(L)*29(W)(mm)
Product size: 75(L)x34.5(W)x85(D)(mm)
sensor length: lm (include the probe)



EFFECTIVE HEAT DISSIPATION

Cooling grid design for more efficient cooling



DETAILED DESCRIPTION



WIRING DIAGRAM





Connection 1: Independent power supply for load

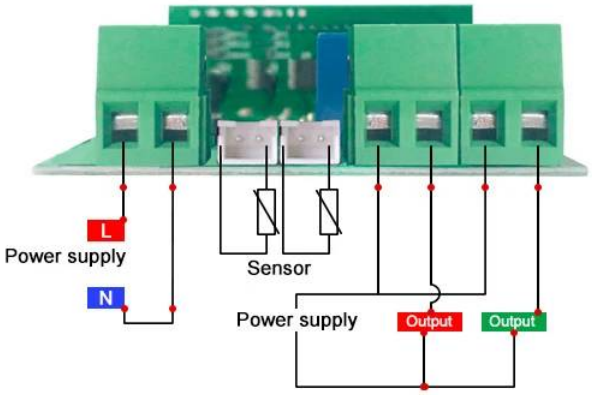

Connection 2: Same power supply for load

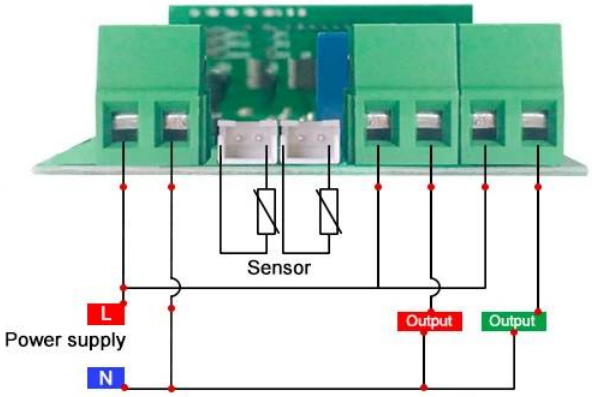


OUT
20.7
°C
OUT
20.3
°C
STC-3008


OUT
°C
OUT
°C
STC-3008


DIY MORE
www.diymore.cc
STC-3008
DC12V
DC24V
AC110V
AC220V
★Strictly distinguish interface of relay,sensor and power.
★Strictly distinguish connection of sensor and power.
Note ★Sensor down-lead and power wire should be kept a proper distance.
1 2 1 2
1 2 3 4 5 6 7 8 9 10
Power Supply
Sensor
Sensor
10A/220VAC
10A/220VAC


DIY MORE
www.diymore.cc
STC-3008
DC12V
DC24V
★Strictly distinguish interface of relay,sensor and power.
★Strictly distinguish connection of sensor and power.
Note ★Sensor down-lead and power wire should be kept a proper distance.
1 2 1 2
1 2 3 4 5 6 7 8 9 10
Power Supply
Sensor
Sensor
10A/220VAC
10A/220VAC


DIY MORE
www.diymore.cc
STC-3008
DC12V
DC24V
Note
★ Strictly distinguish interface of relay,sensor and power.
★ Strictly distinguish connection of sensor and power.
★ Sensor down-lead and power wire should be kept a proper distance.
Power Supply
Sensor
Sensor
104/220VAC
104/220VAC

* Parameter *

STC-3008 DUAL DISPLAY TWO-WAY THERMOSTAT	
Product name :	Microcomputer temperature controller
Product number :	STC-3008
Supply voltage :	12V 、 24V or 110-220AC (three voltage options)
temperature range :	-55℃ ~ +120℃
Temperature measurement accuracy :	±1℃
Line length :	1 meter
size :	75 mm * 85 mm * 35 mm
Applicable scenarios: various sensor control boxes, water heaters, freezer cabinets, fans (not limited to these devices)	

TERMINALS

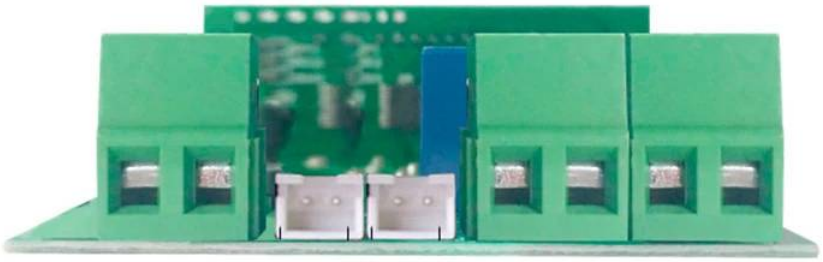

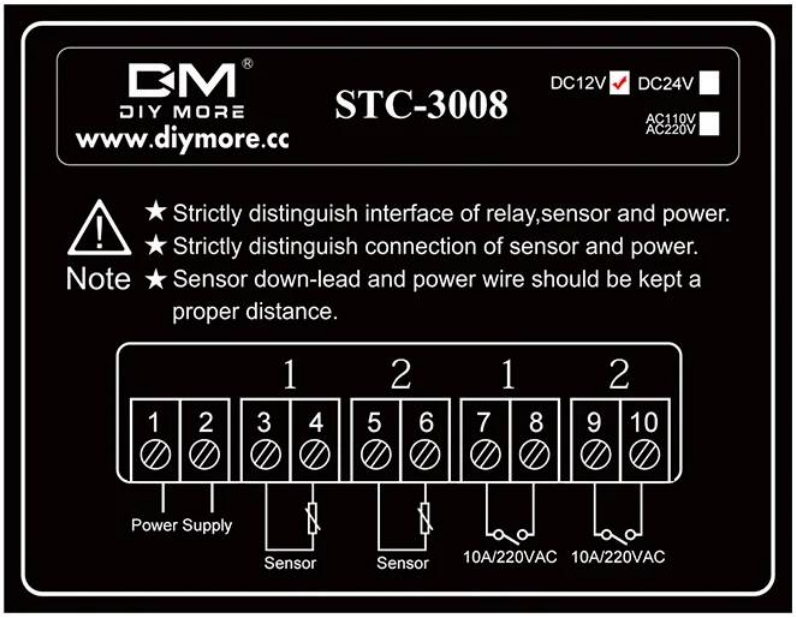
DIY MORE
www.diymore.cc
STC-3008
DC12V
DC24V
AC110V
AC220V
★ Strictly distinguish interface of relay,sensor and power.
★ Strictly distinguish connection of sensor and power.
Note ★ Sensor down-lead and power wire should be kept a proper distance.
1 2 1 2
1 2 3 4 5 6 7 8 9 10
Power Supply
Sensor
Sensor
10A/220VAC
10A/220VAC

TEMPERATURE SETTING





Long press ⚠1 3 seconds, the first group start temperature flash (default 25 ° C) press the plus or minus button to adjust, long press ▽1 3 seconds, stop the temperature value flash (default 40 ° C) press the plus or minus button to adjust.
Long press ⚠2 3 seconds, the second group of dynamic temperature flashes (default 25 ° C) can be adjusted by pressing the plus or minus button, long press ▽2 3 seconds, stop the temperature value flash (default 40 ° C) press the plus or minus button to adjust.
Press ⚠1⚠2 button for 3 seconds at the same time to enter the setting mode, display P0, the first group temperature delay, press ⚠2▽2 to adjust, 0~60 minutes, default 0, after adjustment, press ⚠1 since P1, thesecond group temperature Delay, press ⚠2▽2 to adjust, 0~60 minutes, default 0, after adjustment, press ⚠1 since P2, high temperature alarm function, default 120 °C, press ⚠2▽2 to adjust, adjust, press ⚠1 to enter P3, low temperature Alarm, default -55 °C, press ⚠2▽2 to adjust, wait for the second to automatically exitpress ▽1▽2 3 seconds to reset to factory settings.







DUAL TEMPERATURE PROBE

High quality temperature probe

Line length 1 meter

How to find us

AliExpress

1.Use your phone to download "aliexpress" app.

2.Scan the QR code to follow our store!

SHOPPING

We also accept the wholesale.Pls contact with us to get the wholesale price.If you order quantities is bigger, please also contact with us directly

Add to cart → Continue shopping → Get store coupon → View shopping cart → Buy Now

Shipping



Service

Thanks for choosing Aideepen products.Please kindly help check goods condition before sign for package.if any question about goods,take clear photos or videos,contact us before opening a dispute,problems will be solved at first time.



Five Star Feedback

We aim to maintain high stadards of excellence and strive for 100% customer satisfaction!

Your feedback is extremely important to us.Please do contact us immediately before you give negative/neutral feedback or open a dispute,so we could understand your concern.And solve the problem in the first time.

